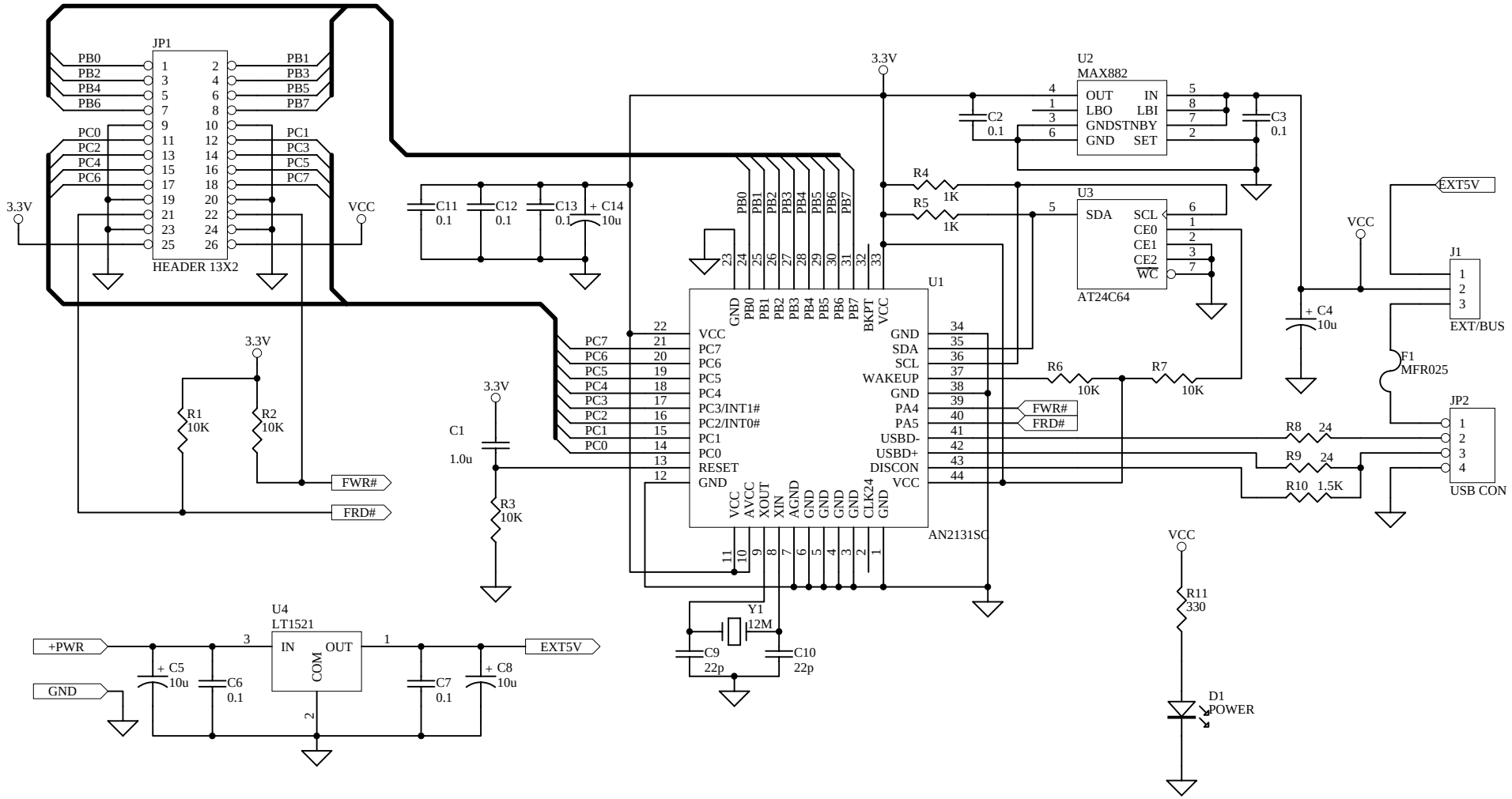


| | | | |
|---|---|---|---|
| Title **AN2131USB** | | | *INternational Parts & INformation Co.,Ltd.* |
| Size: A4 | Number: | Revision: A | *Sengen 2-1-6 C-A-4* |
| Date: 3-Jul-2001 | Time: 18:37:46 | Sheet1 of 1 | *Tsukuba City* *Ibaraki Pref.* *Japan 305-0047* |
| File: C:\Program Files\Design Explorer 99 SE\IPI\IPIDesign.ddb - USB\UsbUnib4.Sch | | | |